THE FISK AWA RADIOLA

Models 81, 82 and 309

FIVE VALVE, ONE AND TWO BAND, A.C. OPERATED, SUPERHETERODYNES

Technical Information & Service Data

ELECTRICAL SPECIFICATIONS

TUNING RANGES:
"Standard Medium Wave"—1600-550 K.C.
"Short Wave" (82 and 309)—13.6-43M.

R.F. ALIGNMENT SETTINGS:
"Standard Medium Wave"—600 K.C. (Osc.), 1500 (Osc. and Aer.).
"Short Wave" (82 and 309)—15M. (Osc. and Aer.).

INTERMEDIATE FREQUENCY ..... 460 K.C.
POWER SUPPLY RATING ..... 200-260V., 50-60 Cycles
(Instruments with other voltage and frequency ratings available.)
POWER CONSUMPTION ..... 60 Watts
VALVE COMPLEMENT:

MODEL 81.
1. 6A8G Frequency Converter.
2. 6U7G I.F. Amplifier.
3. 6B6G 2nd Det., A.V.C., and A.F. Amp.
4. 6V6G Output.
5. 5V4G Rectifier.

MODELS 82 AND 309.
1. 6J8G Frequency Converter.
2. 6U7G I.F. Amplifier.
3. 6B6G 2nd Det., A.V.C., and A.F. Amp.
4. 6V6G Output.
5. 5V4G Rectifier.

LOUDSPEAKER ..... 6½-inch Electrodynamic, Moulded Cabinet—AE15, Wooden Cabinet—AE16
Loudspeaker Transformer TT101
Field Coil Resistance ..... 1250 ohms
Voice Coil Impedance ..... 1.75 ohms at 400 cycles
UNDISTORTED POWER OUTPUT ..... 4.25 watts
DIAL LAMPS ..... 6.3V., .25 amp.

GENERAL DESCRIPTION

Apart from the fact that the model 81 is a one-band receiver, and the models 82 and 309 are of the two-band type, the circuit arrangement of the three models is quite similar.

Features of design include:—Beam power output valve; Inverse feed-back fidelity control; Automatic Volume Control; Straight line frequency tuning condenser; Extended medium wave tuning range of from 550-1600 K.C.; Magnetite cored I.F. transformers and broadcast oscillator coil; Air-dielectric trimming condensers.

The model 309 is a Radio-Gramophone combination. The turntable is driven by an A.C. operated induction motor controlled from a switch on the motor board. The range switch of the receiver in its third anticlockwise position switches the receiver for record reproduction and this is indicated by a green pilot beneath the controls, marked GRAM. With the range switch at medium wave or short wave the dial scale of the respective band is illuminated in the normal manner.

ALIGNMENT PROCEDURE.

Alignment should only be necessary when adjustments have been altered from the factory setting or when repairs have been made to the tuned circuits. Climatic conditions should not seriously affect the performance of the receiver.

It is important to apply a definite procedure, as tabulated, and to use adequate and reliable test equipment. Instruments ideally suited to the requirements are the A.W.A. Junior Signal Generator, Type 2R3911, or the A.W.A. Modulated Oscillator, Type C1070. An output meter is necessary with both these instruments.

If the A.W.A. Type C1070 test oscillator is used, see that a 250,000 ohms resistor is connected between the output terminals and, for short wave alignment, a 400 ohms non-inductive resistor in series with the "hot" output lead.

Connect the ground connection of the test instrument to the receiver chassis.

Perform alignment in the proper order, starting with No. 1, and following all operations across, then No. 2, etc. Adjustment locations are shown in the lay-out diagrams. Keep the volume control set in the maximum clockwise position and regulate the output of the test instrument so that a minimum signal is introduced to the receiver to obtain an observable output indication. This will avoid A.V.C. action and overloading.

ADJUSTING TOOLS.

Two tools are used in the alignment procedure; one is a combination tool for air-trimmer adjustment and locking (Part No. 5371), and the other is a non-metallic screwdriver specially constructed for adjusting the cores within the I.F. transformers and the broadcast oscillator coil (Part No. 5372). These tools may be obtained from the Service Department of the Company.

Alignment Order.	TEST INSTRUMENT. Test Inst. Connection to Receiver.	Test Inst. Setting.	RECEIVER. Receiver Dial Setting.	Circuit to Adjust.	Adjust for Max. Peak Output. 81	82	309
1	*Converter Grid Cap	460 K.C.	550 K.C.	2nd I.F. Trans.	L8	L12	L12
2	*Converter Grid Cap	460 K.C.	550 K.C.	2nd I.F. Trans.	L7	L11	L11
3	*Converter Grid Cap	460 K.C.	550 K.C.	1st I.F. Trans.	L6	L10	L10
4	*Converter Grid Cap	460 K.C.	550 K.C.	1st I.F. Trans.	L5	L9	L9
	Repeat the above adjustments before proceeding.						
5	Aerial Term.	600 K.C.	600 K.C.†	Oscillator	Core L4,	Core L6,	Core L6
6	Aerial Term.	1500 K.C.	1500 K.C.	Oscillator	C10	C6	C11
7	Aerial Term.	1500 K.C.	1500 K.C.	Aerial	C4	C4	C5
	Repeat adjustments 5, 6, and 7.						
8	Aerial Term.	15M.	15M.	Oscillator	—	C8††	C13††
9	Aerial Term.	15M.	15M.‡	Aerial	—	C5**	C6**

* With grid clip connected. A .001 condenser should be connected in series with the "hot" output lead of the test instrument.
† Rock the tuning control back and forth through the signal. Reset the dial pointer to 600 K.C. if necessary. The pointer is soldered to the control wire and may be readily moved by applying a hot soldering iron to the connection.
‡ Rock the tuning control back and forth through the signal.
†† Use the minimum capacity peak if two peaks can be obtained.
** Use the maximum capacity peak if two peaks can be obtained. Check for image signal by tuning the receiver to approx. 15M. It may be necessary to increase the output of the test instrument to receive the signal.

MECHANICAL REPLACEMENT PARTS.

DESCRIPTION. TUNING MECHANISM.	Part No.
Pointer	4244
Pointer Saddle	4243
Pointer Saddle Spring	4246
Pointer Tension Spring	1741
Pointer Drive Wire	——
Drive Wire Jockey Pulley	1730
Pointer Drive Drum	4312
Tuning Drive Spindle	4381
Tuning Drive Spindle Disc Ass'y	4363
Main Drive Segment	1692
Dial Scale (Model 81)	7524
Dial Scale—M.W. (Models 82 and 309)	7525
Dial Scale—S.W. (Models 82 and 309)	7526

DESCRIPTION. TUNING MECHANISM.	Part No.
Dial Scale Backing (Model 81)	7369
M.W. Dial Scale Backing (Models 82 and 309)	7371
S.W. Dial Scale Backing (Models 82 and 309)	7370
Dial Lamp Socket	5463
Dial Scale Retaining Clip	1981
MISCELLANEOUS.	
Fidelity Switch	7083
Range Switch—Model 82	7084
Range Switch—Model 309	7855
Power Cable	209
Aerial and Earth Term. Unit	1579
Valve Sockets	4704
Valve Clips	5793
Loudspeaker Cone Assembly	2822

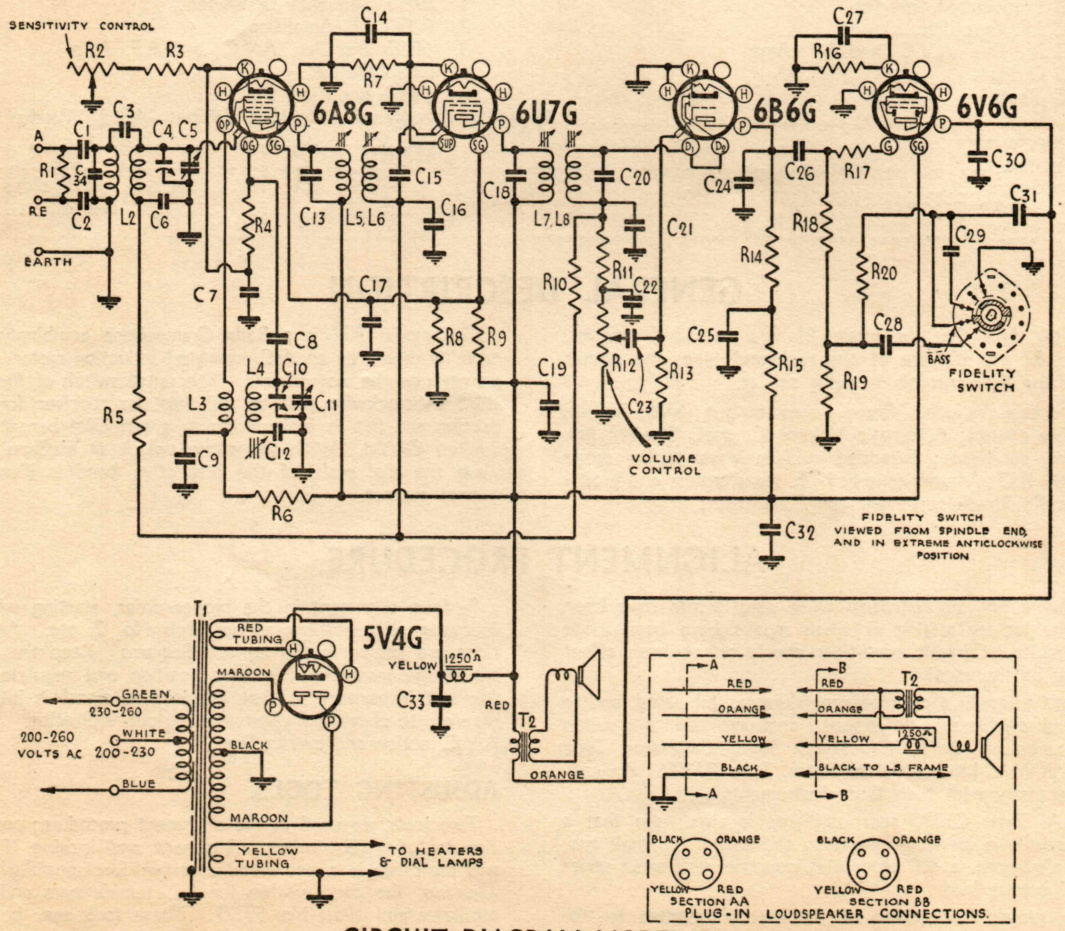

CIRCUIT DIAGRAM MODEL 81

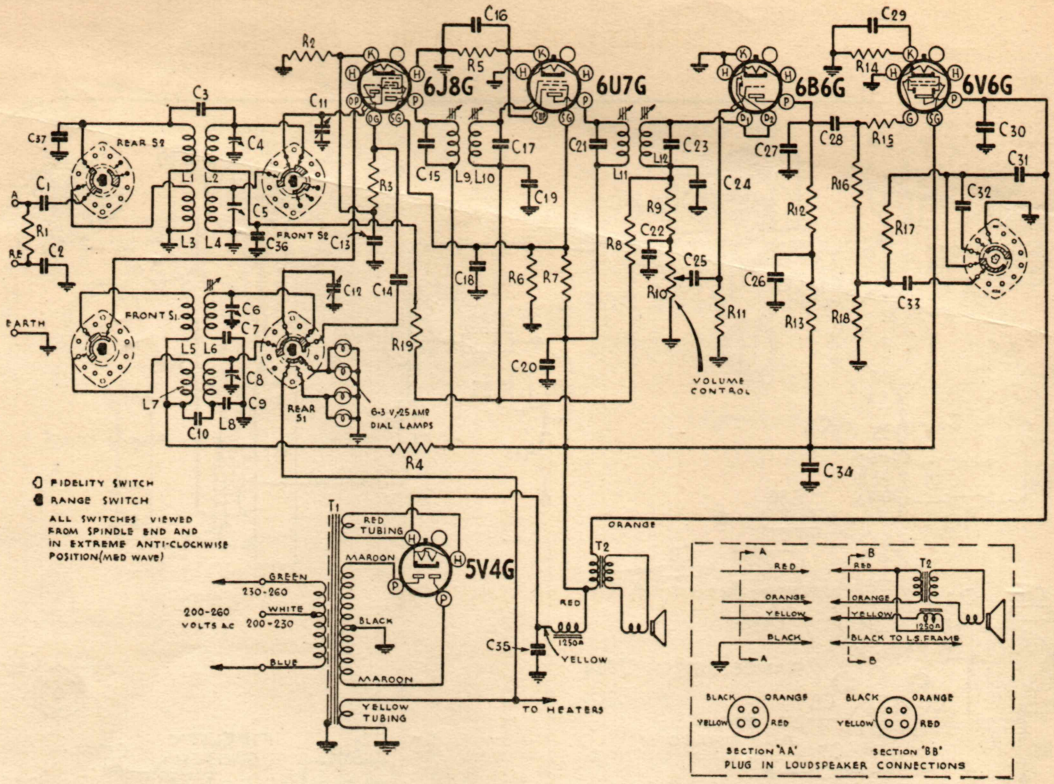

CIRCUIT DIAGRAM MODEL 82

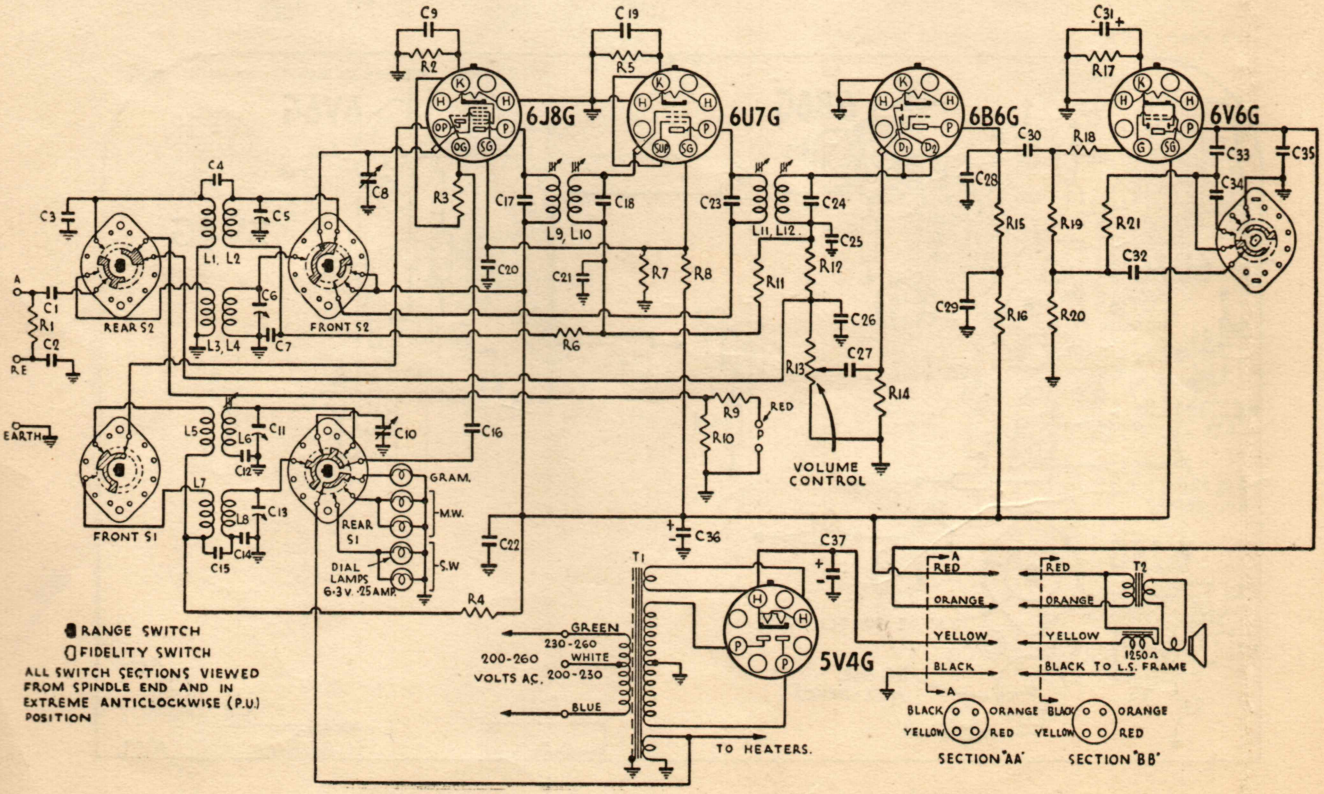

CIRCUIT DIAGRAM MODEL 309

CIRCUIT CODE MODEL 81

Code No.	Part No.	COILS
L1, L2	6747	Aerial Coil.
L3, L4	4354	Oscillator Coil.
L5, L6	7321	1st I.F. Transformer.
L7 L8	4754	2nd I.F. Transformer.

		TRANSFORMERS
T1	7520A	Power Transformer, 50-60C.
T1	7522A	Power Transformer, 40C.
T2	TT101	Loudspeaker Trans.

Code No.	Part No.	RESISTORS
R1		100,000 ohms 1/3 W.
R2	5799	1,500 ohms Sens. Control.
R3		400 ohms 1/3 W.
R4		50,000 ohms 1/3 W.
R5		100,000 ohms 1/3 W.
R6		20,000 ohms 1 W.
R7		900 ohms 1/3 W.
R8		30,000 ohms 2 W.
R9		20,000 ohms 2 W.
R10		1.75 megohms 1/3 W.
R11		60,000 ohms 1/3 W.
R12	4286	500,000 ohms Vol. Control.
R13		10 megohms 1 W.
R14		200,000 ohms 1 W.
R15		20,000 ohms 1 W.
R16		250 ohms 3 W.
R17		50,000 ohms 1/3 W.
R18		390,000 ohms 1/3 W.
R19		50,000 ohms 1/3 W.
R20		250,000 ohms 1/3 W.

Code No.	Part No.	CONDENSERS
C1		500 mmfd. mica.
C2		500 mmfd. mica.
C3		4 mmfd. mica.
C4	3661	2-20 mmfd. air trim.
C5	5798	Tuning Condenser.
C6		.05 mfd. paper.
C7		.1 mfd. paper.
C8		70 mmfd. mica (N).
C9		.05 mfd .paper.
C10	3411B	11-29 mmfd. Air Trim.
C11	5798	Tuning Condenser.
C12		420 mmfd. mica (Padder).
C13		70 mmfd. mica (N).
C14		.1 mfd. paper.
C15		70 mmfd. mica (N).
C16		.05 mfd. paper.
C17		.1 mfd. paper.
C18		70 mmfd. mica (N).
C19		.1 mfd. paper.
C20		70 mmfd. mica (N).
C21		110 mmfd. mica (L).
C22		110 mmfd. mica (L).
C23		.01 mfd. paper.
C24		110 mmfd. mica (L).
C25		.5 mfd. paper.
C26		.02 mfd. paper.
C27		25 mfd. 25V. electro.
C28		2.000 mmfd. mica.
C29		700 mmfd. mica.
C30		.0025 mfd. paper.
C31		.05 mfd. paper.
C32		8 mfd. 450V. electro.
C33		16 mfd. 500V. electro.
C34		50 mmfd. mica (D).

CIRCUIT CODE MODEL 82

Code No.	Part No.	COILS
L1, L2	6747	Aerial Coil, 1600-550 K.C.
L3, L4	7518	Aerial Coil, 13.6-43M.
L5, L6	4354	Osc. Coil, 1600-550 K.C.
L7, L8	7519	Osc. Coil, 13.6-43M.
L9, L10	7321	1st I.F. Transformer
L11, L12	4754	2nd I.F. Transformer.

		TRANSFORMERS
T1	7520A	Power Transformer, 50-60C.
T1	7522A	Power Transformer, 40C.
T2	TT101	Loudspeaker Transformer.

Code No.	Part No.	RESISTORS
R1		100,000 ohms 1/3 W.
R2		400 ohms 1/3 W.
R3		30,000 ohms 1/3 W.
R4		20,000 ohms 1 W.
R5		600 ohms 1/3 W.
R6		20,000 ohms 2 W.
R7		20,000 ohms 2 W.
R8		1.75 megs. 1/3 W.
R9		60,000 ohms 1/3 W.
R10	4286	500,000 ohms Vol. Control.
R11		10 megs. 1 W.
R12		200,000 ohms 1 W.
R13		20,000 ohms 1 W.
R14		250 ohms 3 W.
R15		50,000 ohms 1/3 W.
R16		390,000 ohms 1/3 W.
R17		250,000 ohms 1/3 W.
R18		50,000 ohms 1/3 W.
R19		100,000 ohms 1/3 W.

Code No.	Part No.	CONDENSERS
C1		500 mmfd. mica.
C2		500 mmfd. mica.
C3		4 mmfd. mica.
C4	3661	2-20 mmfd. air trim.
C5	3411B	11-29 mmfd. air trim.
C6	3411B	11-29 mmfd. air trim
C7		420 mmfd. mica (padder).
C8	3658	2-10 mmfd. air trim.
C9		3500 mmfd. mica (padder).
C10		.05 mfd. paper.
C11	7512	Tuning condenser.
C12	7512	Tuning condenser.
C13		.1 mfd. paper.
C14		70 mmfd. mica (N).
C15		70 mmfd. mica (N).
C16		.1 mfd. paper.
C17		70 mmfd. mica (N).
C18		.1 mmfd. paper.
C19		.05 mfd. paper.
C20		.1 mfd. paper.
C21		70 mmfd. mica (N).
C22		110 mmfd. mica (L).
C23		70 mmfd. mica (N).
C24		110 mmfd. mica (L).
C25		.01 mfd. paper
C26		.5 mfd. paper
C27		110 mmfd. mica (L).
C28		.02 mfd. paper
C29		25 mfd. 25V. electro.
C30		.0025 mfd. paper.
C31		.05 mfd. paper.
C32		700 mmfd. mica.
C33		2000 mmfd. mica.
C34		8 mfd. 450V. electro.
C35		16 mfd. 500V. electro.
C36		.05 mfd. paper.
C37		50 mmfd. mica (D).

CIRCUIT CODE MODEL 309

Code No.	Part No.	COILS
L1, L2	6747	Aerial Coil, 1600-550 K.C.
L3, L4	7518	Aerial Coil, 13.6-43M.
L5, L6	4354	Osc. Coil, 1600-550 K.C.
L7, L8	7519	Osc. Coil, 13.6-43M.
L9, L10	7321	1st I.F. Transformer.
L11, L12	4754	2nd I.F. Transformer.

		TRANSFORMERS
T1	7520A	Power Transformer, 50-60C.
T1	7522A	Power Transformer, 40C.
T2	TT101	Loudspeaker Transfrmr.

Code No.	Part No.	RESISTORS
R1		100,000 ohms 1/3 W.
R2		400 ohms 1/3 W.
R3		30,000 ohms 1/3 W.
R4		20,000 ohms 1 W.
R5		600 ohms 1/3 W.
R6		100,000 ohms 1/3 W.
R7		20,000 ohms 2 W.
R8		20,000 ohms 2 W.
R9		50,000 ohms 1/3 W.
R10		20,000 ohms 1/3 W.
R11		1.75 megohms 1/3 W.
R12		60,000 ohms 1/3 W.
R13	4286	500,000 ohms Vol. Control.
R14		10 megohm 1 W.
R15		200,000 ohms 1 W.
R16		20,000 ohms 1 W.
R17		250,000 ohms 3 W.
R18		50,000 ohms 1/3 W.
R19		390,000 ohms 1/3 W.
R20		50,000 ohms 1/3 W.
R21		250,000 ohms 1/3 W.

Code No.	Part No.	CONDENSERS
C1		500 mmfd. mica.
C2		500 mmfd. mica.
C3		50 mmfd. mica (D).
C4		4 mmfd. mica.
C5	3661	2-20 mmfd. air trim.
C6	3411B	11-29 mmfd. air trim.
C7		.05 mfd. paper.
C8	7512	Tuning Condenser.
C9		.1 mfd. paper.
C10	7512	Tuning Condenser.
C11	3411B	11-29 mmfd. air trim.
C12		420 mmfd. mica (padder).
C13	3658	2-10 mmfd. air trim.
C14		3500 mmfd. mica (padder).
C15		.05 mfd. paper.
C16		70 mmfd. mica (N).
C17		70 mmfd. mica (N).
C18		70 mmfd. mica (N).
C19		.1 mfd. paper.
C20		.1 mfd. paper.
C21		.05 mfd. paper.
C22		.1 mfd. paper.
C23		70 mmfd. mica (N).
C24		70 mmfd. mica (N).
C25		110 mmfd. mica (L).
C26		110 mmfd. mica (L).
C27		.01 mfd. paper.
C28		110 mmfd. mica (L).
C29		.5 mfd. paper.
C30		.02 mfd. paper.
C31		25 mfd., 25V. electrolytic.
C32		2000 mmfd. mica.
C33		.05 mfd. paper.
C34		700 mmfd. mica.
C35		.0025 mfd. paper.
C36		8 mfd. 450V. electrolytic.
C37		16 mfd. 500V. electrolytic.

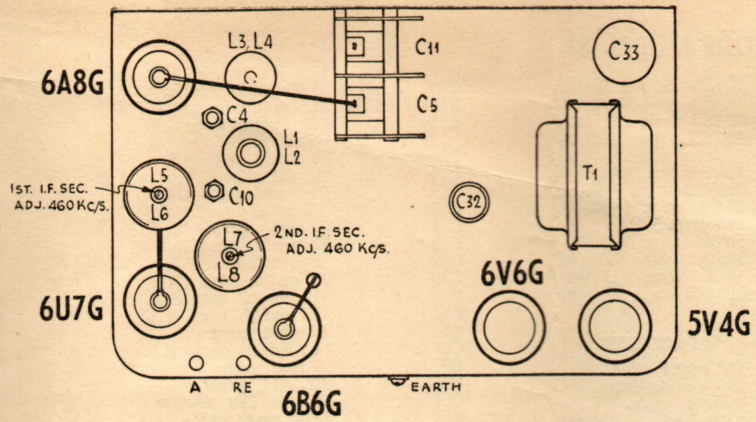

Layout Diagram—Model 81 (top view).

SOCKET VOLTAGES (81)

	Cathode to Chassis. Volts.	Screen to Chassis. Volts.	Plate to Chassis. Volts.	Plate Current M.A.	Heater. Volts
6A8G Detector	4.0	100	250	3.0	6.3
Oscillator	—	—	180	4.0	—
6U7G I.F. Amplifier ..	5.0	100	250	4.0	6.3
6B6G 2nd Detector, A.V.C. Aud. Amp.	—	—	*132	0.6	6.3
6V6G Output	12.0	250	225	45	6.3
5V4G Rectifier	540/270 Volts, 65 M.A., total current				5.0

85 volts across Loudspeaker field.

* Cannot be measured with ordinary voltmeter.

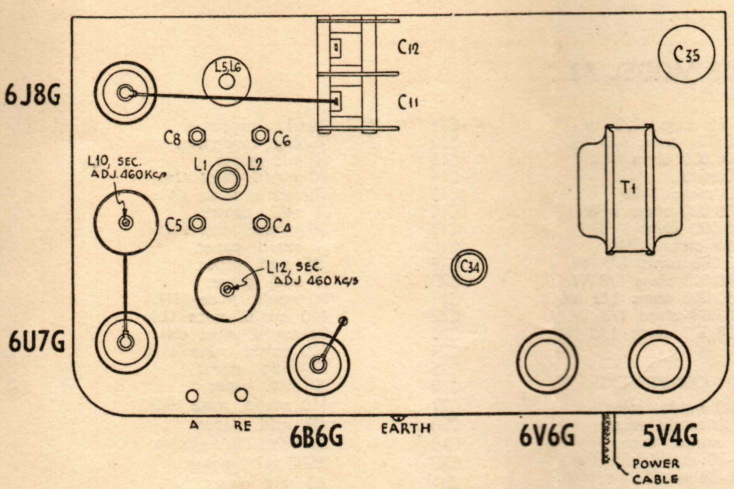

Layout Diagram—Models 82 and 309 (top view).

SOCKET VOLTAGES (82 & 309)

	Cathode to Chassis. Volts.	Screen to Chassis. Volts.	Plate to Chassis. Volts.	Plate Current M.A.	Heater. Volts.
6J8G Detector	3.0	100	250	1.0	6.3
Oscillator	—	—	150	5.5	—
6U7G I.F. Amplifier ..	4.0	100	250	5.0	6.3
6B6G 2nd Detector, A.V.C., Audio-Amplifier ..	—	—	*132	0.6	6.3
6V6G Output	12.0	250	225	45	6.3
5V4G Rectifier	270/540 volts, 70 M.A., total current				5.0

90 volts across Loudspeaker field.

* Cannot be measured with ordinary voltmeter.

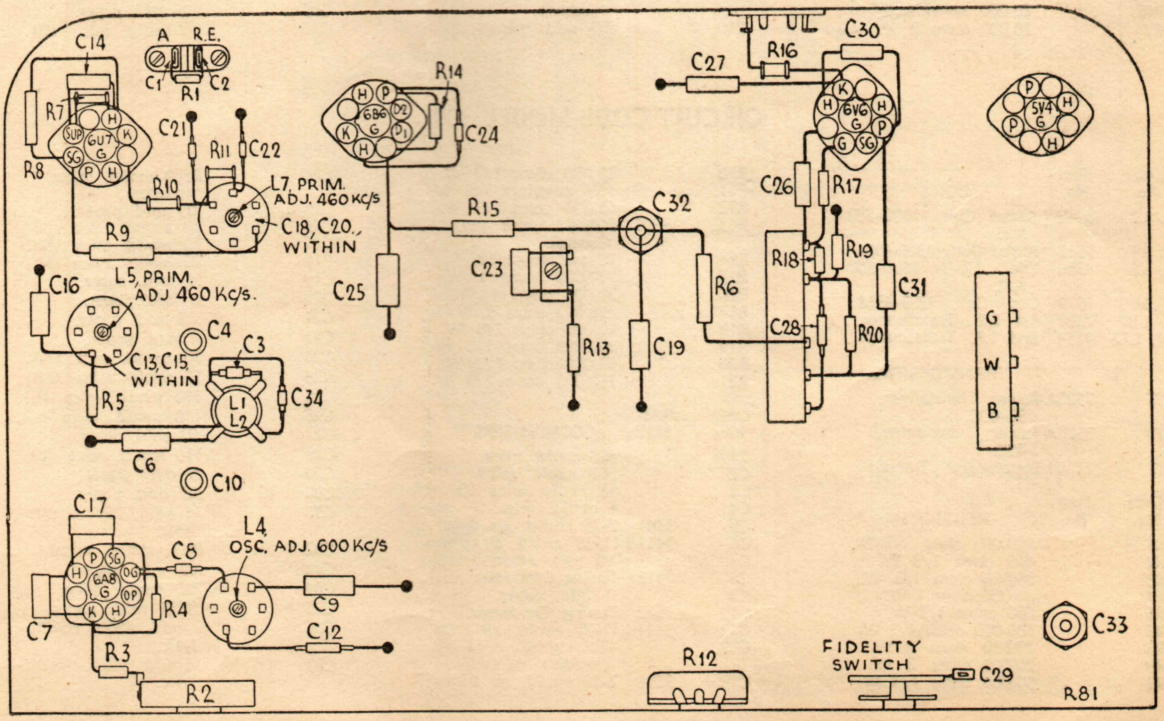

Layout Diagram—Model 81 (underneath view).

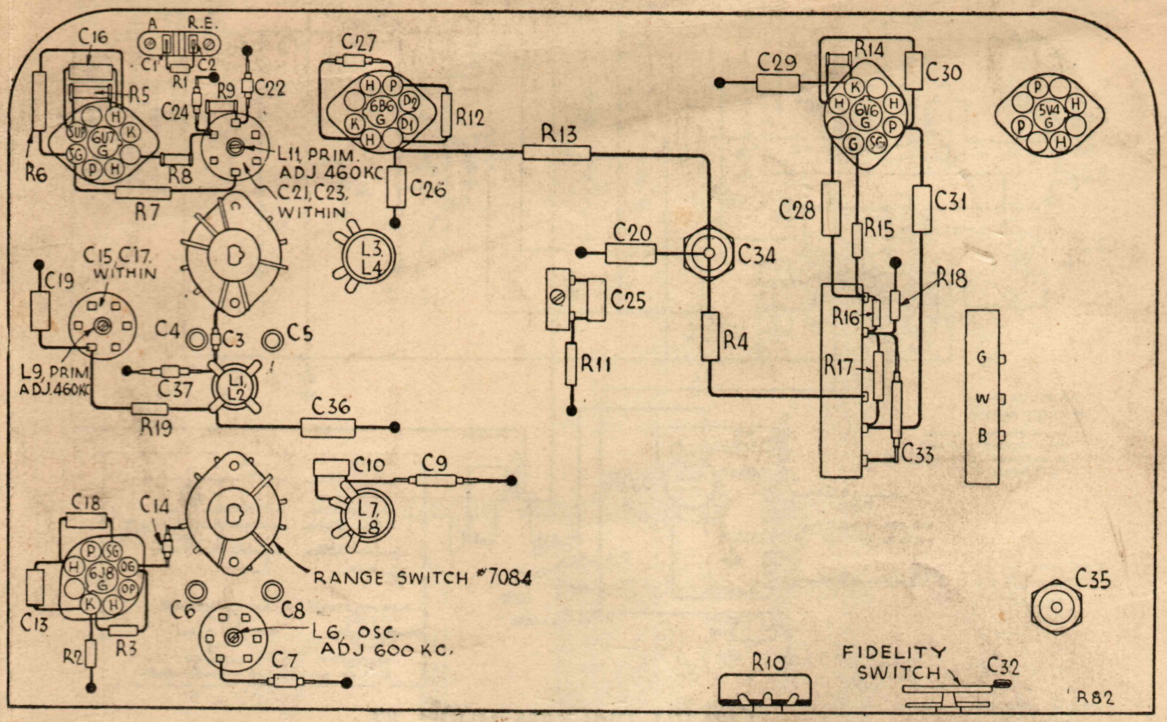

Layout Diagram—Model 82 (underneath view).

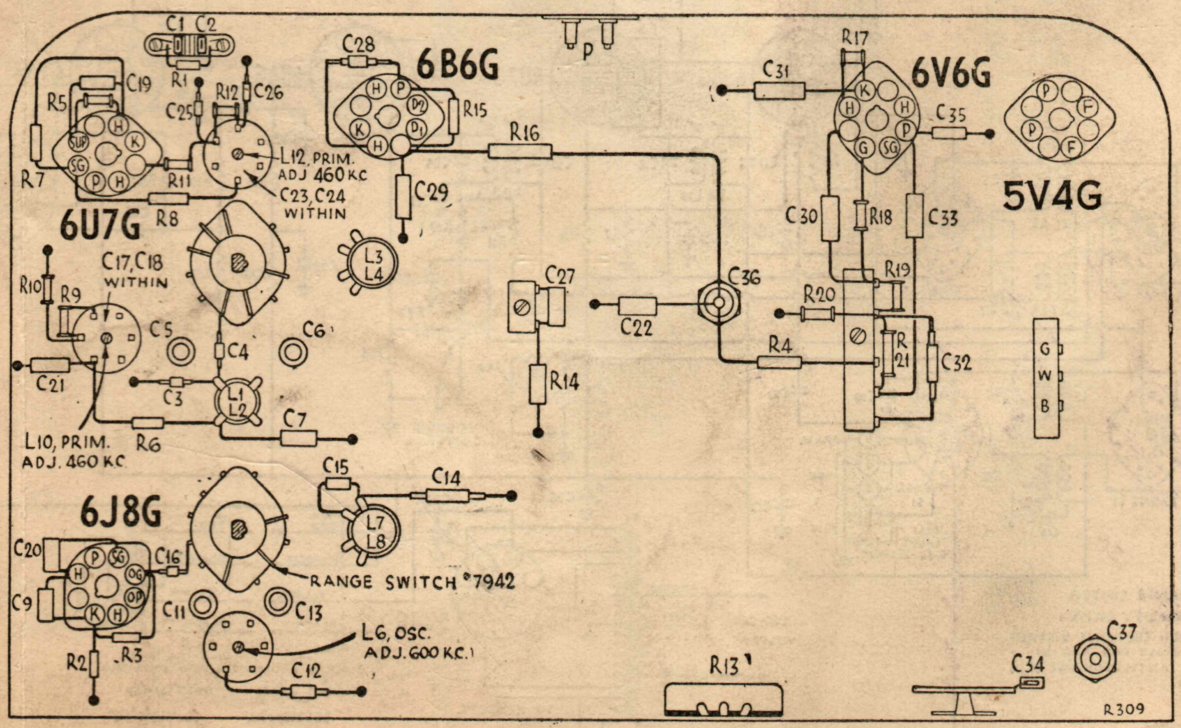

Layout Diagram—Model 309 (underneath view).